• Installation • Operation • Repair • Parts

PowerFLO™ 5800/5900 Series

12 Volt DC Motor-Driven Diaphragm Pumps

Specifications

Motor

Type: 12 VDC, permanent magnet, totally enclosed, non-ventilated

Leads: 14 AWG, 12" long

Duty Cycle: See Heat Rise graph

Temperature Limits: Motor is not equipped with thermal protection. For user safety, optimal performance, and maximum motor life, the motor surface temperature should not exceed 180°F (82°C) (See Heat Rise graphs).

Pump

Type: 5 chamber positive displacement diaphragm pump, self priming, capable of being run dry, demand or bypass mode

Certifications: NSF Standard 58

Liquid Temperature: 140°F (60°C) Max.

Priming Capabilities: 14 feet (4 m)

Max Pressure: 60 PSI (4 bar)

Inlet/Outlet Ports:
5800: 1/2" FNPT
5900: Quick Attach (See fittings selection chart)

Materials of Construction

Housing: Polypropylene **Diaphragm:** Santoprene

Valves: Viton **Fasteners:** Stainless steel and zinc plated

Weight

5830/5930 & 5836/5936: 6 lbs (2.7 kg)

5840/5940 & 5850/5950: 8 lbs (3.6 kg)

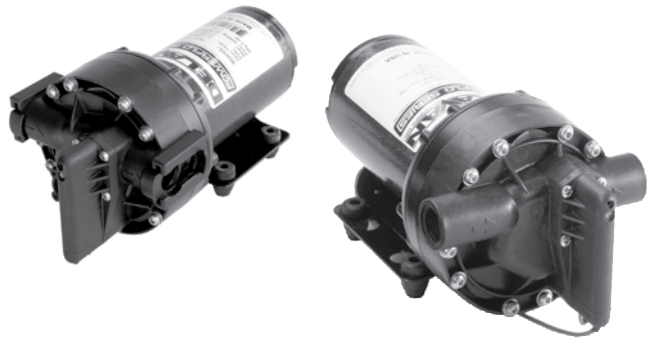

Heat Rise

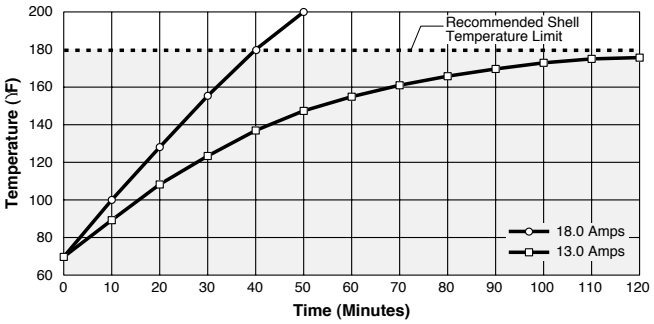

Approximate values, actual values will vary with ambient temperature.

Quick Attach Nylon Inlet/Outlet Port Fittings (5900 Series Models only)

Item #	Description
5DFA38	3/4" QA x 3/8" HB Straight Fitting w/ O-Ring, Nylon
5DFA12	3/4" QA x 1/2" HB Straight Fitting w/ O-Ring, Nylon
5DFA34	3/4" QA x 3/4" HB Straight Fitting w/ O-Ring, Nylon
5DFE38	3/4" QA x 3/8" HB Elbow Fitting w/ O-Ring, Nylon
5DFE12	3/4" QA x 1/2" HB Elbow Fitting w/ O-Ring, Nylon
5DFE34	3/4" QA x 3/4" HB Elbow Fitting w/ O-Ring, Nylon
PK-5DFA38	3/4" QA x 3/8" HB Straight Fitting w/ O-Ring, Nylon, 2 per pack
PK-5DFA12	3/4" QA x 1/2" HB Straight Fitting w/ O-Ring, Nylon, 2 per pack
PK-5DFA34	3/4" QA x 3/4" HB Straight Fitting w/ O-Ring, Nylon, 2 per pack
PK-5DFE38	3/4" QA x 3/8" HB Elbow Fitting w/ O-Ring, Nylon, 2 per pack
PK-5DFE12	3/4" QA x 1/2" HB Elbow Fitting w/ O-Ring, Nylon, 2 per pack
PK-5DFE34	3/4" QA x 3/4" HB Elbow Fitting w/ O-Ring, Nylon, 2 per pack

PowerFLO™ 5800/5900 Series

5830/5930: 3.0 GPM

5836/5936: 3.6 GPM

Inches (mm)

Bypass Models

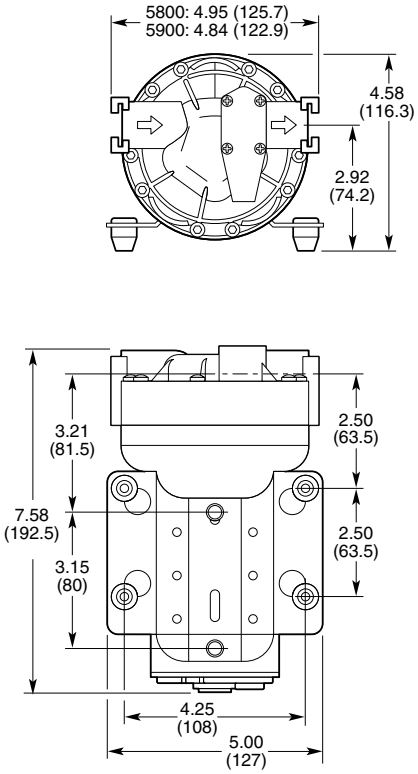

Demand Models

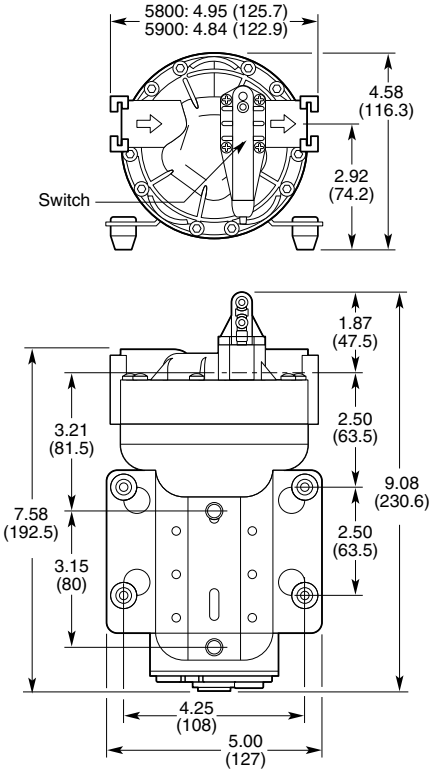

5840/5940: 4.0 GPM

5850/5950: 5.0 GPM

Inches (mm)

Bypass Models

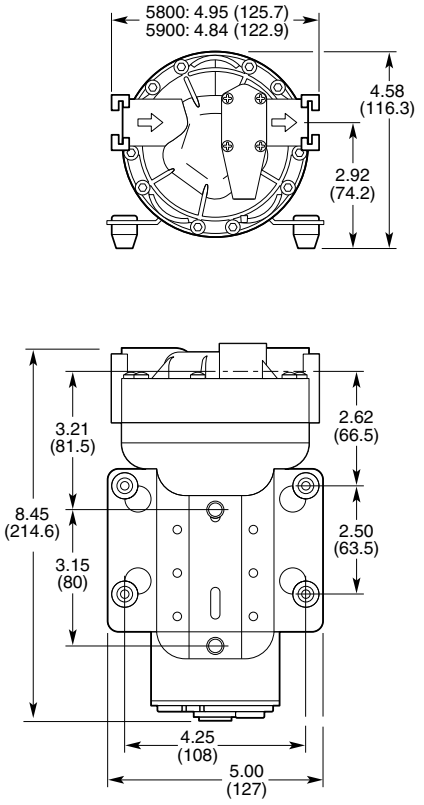

Demand Models

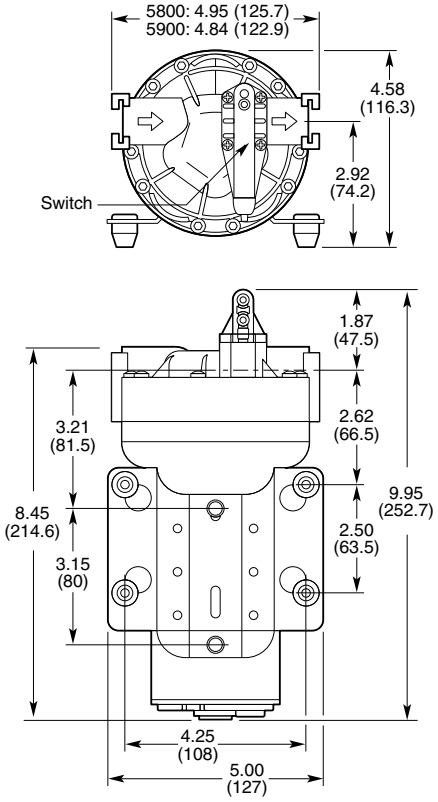

PowerFLO™ 5800/5900 Series

Installation Recommendations

Mounting:

Determine the optimum location for your pump.

1. The pump should be mounted in a dry place and away from any source of heat. If an enclosure is used, special instructions for cooling the motor may be necessary. Consult the Factory.
2. Do not subject the pump to extreme high or low (freezing) temperatures while in operation. (Operating ambient temperature range is 32° F to 115°F).
3. The pump may be mounted horizontally with the outlet port on the right when viewed from the pump end or with the pump above the mount, or vertically with the pump above or below the motor.

Plumbing:

1. Use suction hose on inlet of pump. We recommend use of flexible tubing with proper pressure rating.
2. Pump will prime only if all pressure is relieved from outlet port.
3. It is recommended that pure water be pumped or an in-line sediment filter (50 mesh) be installed at the inlet side to keep foreign debris out of the system. If a check valve is installed in the plumbing, it must have a cracking pressure of no more than 2 psi (0.14 bar).
4. Avoid any sharp bends which may crimp tubing and restrict flow. Use 90° elbow fittings if necessary.
5. The pump should always be mounted prior to any components which could introduce particles to the water; thus, preventing them from entering the pump chambers and possibly causing clogging.

Electrical:

1. The 5800/5900 series pumps are designed for intermittent duty. Make sure that “OFF” periods are sufficient. Refer to Rapid ON/OFF Operation. Consult the factory for particular data and design criteria.
2. Be sure power supply used is adequate for the application.
3. Pump and motor specifictions are based on an alternator charged battery (13.7 VDC)
4. Use sufficient battery supply power. Smaller ATV and lawn tractor batteries may affect pump performance due to low voltage and amp ratings.

Installation and Operation Precautions:

1. The pump is equipped with a pressure sensing demand switch that controls the maximum operating pressure.
2. In addition, never subject the pump to pressures above 125 PSI (8.5 bars).
3. As long as there is inlet water pressure, the pump will not stop forward flow of water even if the motor is turned off. Be sure the system has positive means of shutting off water supply.
4. Do not operate pump in an explosive environment. Arcing from the motor brushes, switch or excessive heat from an improperly cycled motor may cause an explosion.
5. Do not locate the pump motor near low temperature plastics or combustible material. The surface temperature of the motor may exceed 250°F (120°C).
6. Do not pump gasoline or other flammable liquids. Pump head materials are designed for use with water only. Do not use with petroleum products.
7. Do not assume fluid compatibility. If the fluid is improperly matched to the pumps’ elastomers, a leak may occur.
8. To prevent electrical shcok, disconnect power before initiating any work. In the case of pump failure, the motor housing and/or pump fluid may carry high voltage to components normally considered safe. Therefore, always consider electrical shock hazard when working with and handling electrical equipment. If uncertain, consult an Electrician. Electrical wiring should only be done by a qualified electrician per local and state electrical codes.

Installation and Operation

1. Turn off water supply.
2. Cut flexible tubing in sufficient length to avoid any stress on the tubing where it connects to the pump or the fitting on any accessory.
3. Insert tubing into pump ports. If fittings are John Guest type, be sure tubing is inserted past the resistance point until it bottoms out against the port stop. If compression fittings with threaded nuts are used, insert tubing until it bottoms out in the port and hand tighten the compression nut until the connection is tight. Then use a wrench to tighten the nut 1/2 turn clockwise or follow the wrench tightening instructions provided by the fitting manufacturer.
4. The pump is now ready for operation. Turn on water supply to allow water to flow to the pump.
5. If the power source is a transformer, plug the appropriate supplied/approved transformer into the receptacle and connect the pump to the transformer. If the power source is not a transformer, connect the pump to the appropriate power source. Open the discharge or dispensing valve. Allow water to circulate, purging any entrapped air.
6. The pump will now start building pressure. Operating pressure will vary with flow rate, flow valve, feed-water pressure and line voltage. Check for fitting leaks.
7. If compression fittings with threaded nuts are used, observe any leaks after pump has run for approximately 15 minutes. Further tighten compression nuts approximately 1/8 to 1/4 of a turn on all fittings in the system. Wait 15 minutes and repeat the leak check. Note: Further adjustments should not be necessary although it may take several days of operation before all the air has been purged and the system is stabilized.
8. Adjusting the Pressure Switch. Should the pressure switch OFF setting vary with use and time to an unsuitable value, it may be adjusted for optimum performance. Turn the setscrew clockwise to increase the OFF pressure setting and counter clockwise to decrease. The screw should not be adjusted more than one half turn without consulting the Factory. Excessive adjustment of the pressure switch could cause low system pressure, rapid cycling ON/OFF operation, and reduced pump and motor life. Damage may occur. The Warranty does not cover improper adjustment of the pressure switch.

Troubleshooting Guide

Problem/Causes and Remedies

Pump will not Start
Check:
- Correct voltage (±10%) and electrical connections
- Fuse or breaker
- Pressure switch operation and correct voltage at switch
- Rectifier or motor for open or grounded circuit
- Locked drive assembly

Pump will not Prime (No discharge with motor running)
Check:
- Debris in strainer
- Restriction (kinks) in inlet/outlet tubes
- Debris or swelling in inlet/outlet valves

Pump will not Shut Off (Output line closed and no leaks)
Check:
- Air trapped in outlet line or pump head
- Correct voltage to pump
- Debris in pump inlet/outlet valves
- Loose drive assembly or pump head screws
- Pressure switch operations/adjustments

Leaks from Pump Head or Switch
Check:
- Loose screws at switch or pump head
- Switch diaphragm ruptured or pinched
- Punctured diaphragm if fluid is present

Servicing:

Every Year: Check system against operating standards.

Every 2-3 Years: We recommend replacing the diaphragm and checking against operating standards.

Replacement Parts

PowerFlow Models 5800/5900

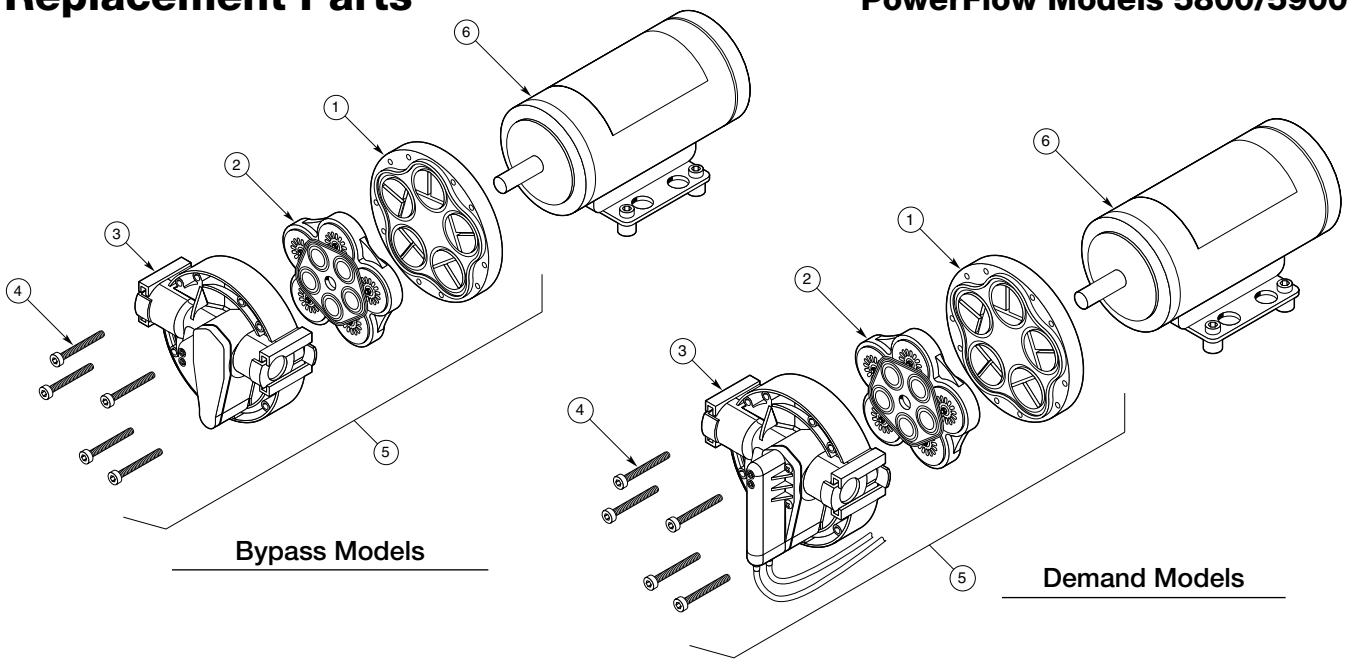

Item	Description	Part Number	Qty
1	Lower Housing		1
	5830/5836 - 5930/5936 – Demand or Bypass	LHA5510-1E77	
	5840/5940 – Demand or Bypass	LHA5512-1E77	
	5850/5950 – Demand or Bypass	LHA5513-1E77	
2	Valve Assembly		1
	5800/5900 Series Pumps	VHA-5513-1E77	
3	Upper Housing		1
	5800 w/Pressure Switch	UHA-5513-1E77	
	5800 w/Bypass	UHA-5513-2E77	
	5900 w/Pressure Switch	UHA-5503-1E77	
	5900 w/Bypass	UHA-5503-2E77	
4	Mounting Bolts	MB-5500-1	4
5	Complete Pump Head w/Threaded Ports		1
	5830/5836 w/Pressure Switch	5510-1X77	
	5830/5836 w/Bypass	5510-2X77	
	5840 w/Pressure Switch	5512-1X77	
	5840 w/Bypass	5512-2X77	
	5850 w/Pressure Switch	5513-1X77	
	5850 w/Bypass	5513-2X77	
	Complete Pump Head w/Quick Attach Ports		1
	5930/5936 w/Pressure Switch	5500-1X77	
	5930/5936 w/Bypass	5500-2X77	
	5940 w/Pressure Switch	5502-1X77	
	5940 w/Bypass	5502-2X77	
	5950 w/Pressure Switch	5503-1X77	
	5950 w/Bypass	5503-2X77	
6	12 VDC Motor		1
	5800/5900 Series w/No Switch, No Connector	M12-58A	
	5800/5900 Series w/Connector, No Switch	M12-58B	
	5800/5900 Series w/Switch and Connector	M12-58C	
	5800/5900 w/Bypass	M70-563-MO	

Pressure Sensing Demand Switch

The PowerFLO Series 7800 pump is controlled by a built-in pressure sensing demand switch. When a faucet or valve is opened down stream of the pump, line pressure drops thus starting the pump automatically. Conversely, when the valve shuts, the line pressure increases turning the pump off automatically. The pressure switch actuates in response to the pump outlet pressure at a predetermined and preset pressure. The pump label indicates the predetermined ON and OFF pressures. Typically, the OFF pressure is accurately set at the Factory and the ON pressure is within an allowable range below that value. In response to the characteristics of the system in which the pump is installed, the flexibility and length of the tubing, the faucet or valves and the duration that they are open; these pressure settings may vary. Therefore, variation in pressure setting is expected with use and over time.

Standard Warranty

Delavan warrants PowerFLO Series Pumps for a period of one year from date of manufacture.

All products sold by Delavan are warranted only to purchasers from Delavan for resale or for use in purchasers' own business or original equipment manufacture, against defects in workmanship or materials under normal use, maintenance and service (rental use excluded).

The sole and exclusive obligation of Delavan under this or any implied warranty shall be to replace or, at its option, to repair, without charge, any product which is determined by Delavan to be defective in workmanship or materials after the product is returned to the Delavan factory*, shipping costs prepaid.

In no event shall Delavan be liable to any person for indirect or consequential damages or for injury or commercial loss resulting from any use or inability to use any Delavan product. Delavan expressly negates any other warranty, express or implied, including any warranty of merchantability or fitness for a particular purpose, or arising from any course of dealing or custom or usage of trade.

No person, including any dealer or representative of Delavan, is authorized to make any representation or warranty on behalf of Delavan in addition to or inconsistent with these provisions. Purchasers to whom these provisions apply agree to hold Delavan harmless from claims by their customers in excess of the obligations of Delavan expressly set forth herein.

* Important return safety instructions:

When you return your pump for warranty or repair, you must always do the following:

1. Flush chemical residue from the pump (best done in the field).
2. Tag pump with type of chemicals having been sprayed.
3. Include complete description of operation problem, such as how pump was used, symptoms of malfunction, etc.

Since pumps can contain residues of toxic chemicals these steps are necessary to protect all the people who handle return shipments, and to help pinpoint the reason for the breakdown.

DELAVAN AG PUMPS, INC.

1228 Chestnut Avenue • Minneapolis, MN 55403
Toll Free: 1-866-DELAVAN (335-2826) • PH: 612-333-3189
Toll Free Fax: 1-888-726-5906 • Fax: 612-333-3231

delavanagpumps.com